This document contains the proprietary information of Tandemloc, Inc. and your access and use shall be, and is at all times, pursuant to and limited by the Tandemloc, Inc. Terms of Use.
You shall not , and shall not encourage, assist, or authorize another party to copy, distribute, publicly display, modify, reverse engineer, decompile, or take any other action to reproduce this document or the information contained herein.

©2019 by Tandemloc, Inc.
Dimensions are subject to manufacturing tolerance and change.

REVISIONS			
REV	DESCRIPTION	DATE	APPROVED

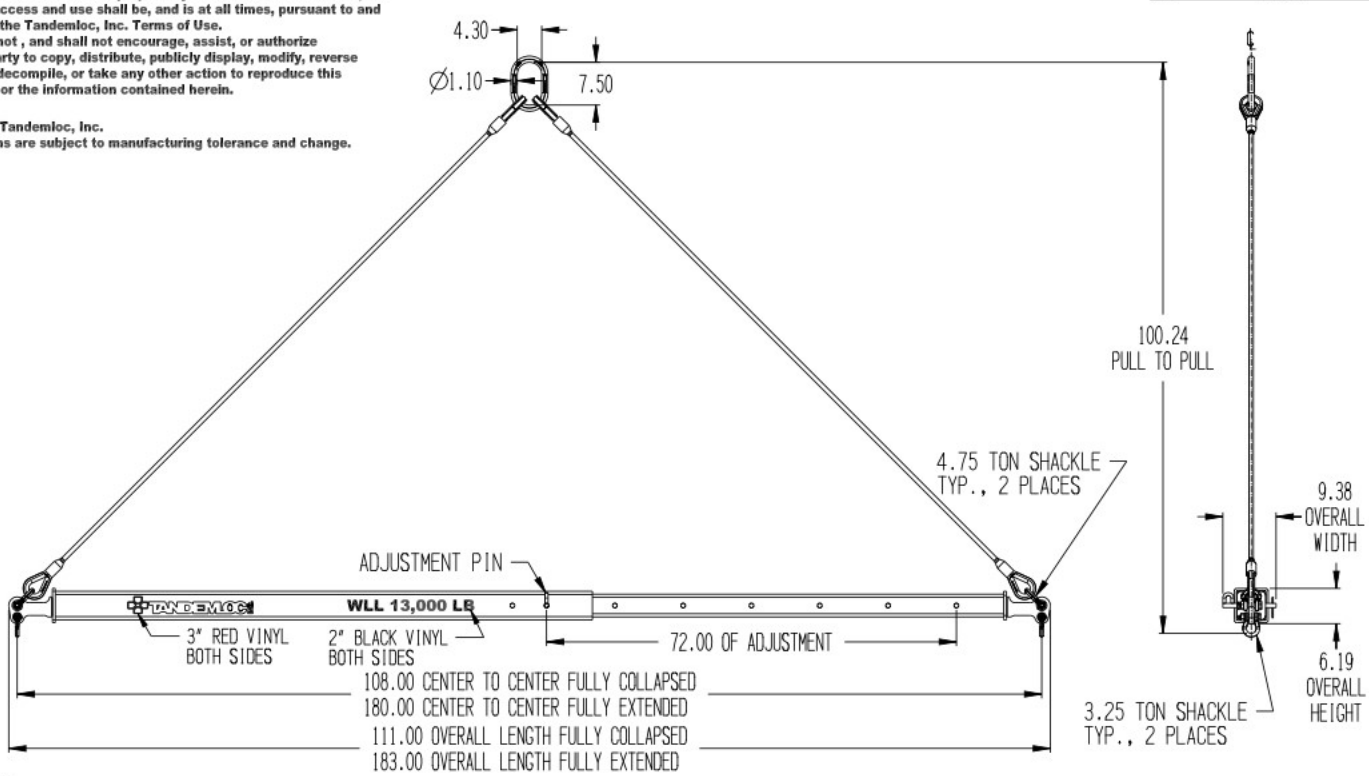

NOTES:
1. PART NO.: AT14A013-180-PA, 108"-180" TELESCOPIC SPREADER
   AT14A013-180SPA, 108"-180" TELESCOPIC SPREADER WITH TOP SLING
2. WLL: 13,000 LB. @ 45° MINIMUM
3. PROOF TESTED TO 125% (16,250 LB.) AND CERTIFIED
4. STANDARD SPECIFICATION # EAD21000A APPLIES
5. FINISH: SANDBLAST AND PRIME AND PAINT YELLOW
6. CALCULATED WEIGHT: 347 LB. SPREADER WITH SLING: 385 LB.
7. DESIGNED AND MANUFACTURED TO MEET OR EXCEED
   ASME B30.20 AND BTH-1, DESIGN CATEGORY B, SERVICE CLASS O.

** DO NOT SIGN IF CHANGES ARE REQUIRED **
CUSTOMER APPROVAL: _____
DATE: _____

☒ "X" DENOTES APPLICABLE DATA
UNLESS OTHERWISE NOTED, DIMENSIONS ARE IN INCHES & TOLERANCES ARE:
.XX ±.06 .XXX ±.030
.XXX ±.03

☐ "X" DENOTES APPLICABLE DATA
LIST MAX CASTING TOL. TO:
0 TO 4" ±.030 , 4.01" TO 7" ±.039"
7.01" TO 10.5" ±.045"
OVER 10.5" ±.052"

THIS DOCUMENT CONTAINS DATA WHICH WHICH IS EITHER PATENTED, PATENT PENDING OR IS THE PROPERTY OF TANDEMLOC, INC. DISCLOSURE, OR COPYING WITHOUT THE WRITTEN AUTHORIZATION OF TANDEMLOC, INC. IS EXPRESSLY PROHIBITED.

APPROVALS	DATE
DRAWN DAH	12-19-18

TANDEMLOC

TITLE AT14A013-180-PA 108"-180" TELESCOPIC SPREADER

SIZE	CAGE CODE	DWG NO.	REV.
D	65059	SAT14A013-180-PA	-

SCALE | WEIGHT | SHEET 1 OF 1