REVISIONS			
REV	DESCRIPTION	DATE	APPROVED
A	WEIGHT WAS 412 LB., ADDED TWO OUTER HOLES TO BOTTOM PADEYES. OVERALL WAS 120.00, 61.75 WAS 60.00, 1.50 WAS 1.38 ON BOTTOM	10-22-09	DAH
B	ADDED 4 OUTER GUSSETS TO BEAM, WEIGHT WAS 418 LB.	11-19-09	DAH
C	ADDED OVERALL HEIGHT AND PULL TO PULL DIMENSIONS	01-27-11	DAH

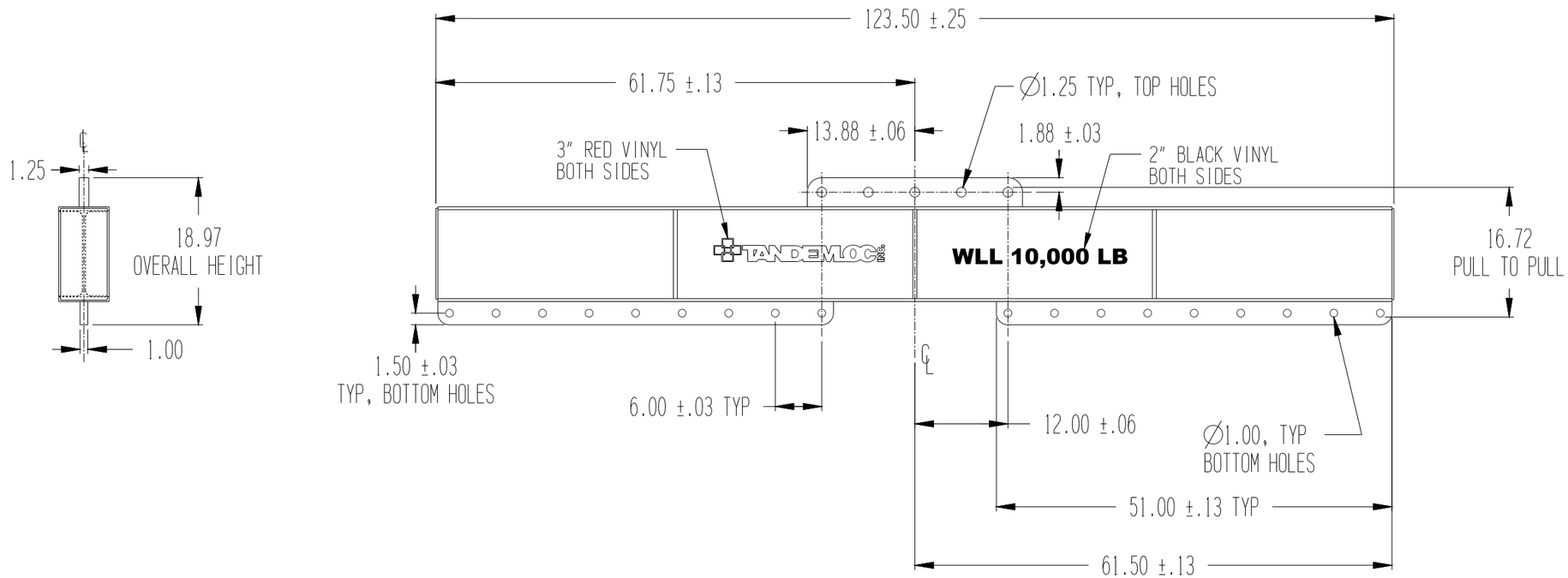

NOTES:
1. PART NO.: S35000B-1PA, 5T WLL LIFT BEAM
2. WLL: 5T (10,000 LB.)
3. PROOF TESTED TO 125% (12,500 LB.) AND CERTIFIED
4. STANDARD SPECIFICATION # EAD21000A APPLIES
5. FINISH: SANDBLAST, PRIME AND PAINT SAFETY YELLOW
6. CALCULATED WEIGHT: 427 LB.
7. LIFT BEAM IS SYMMETRICAL ABOUT NOTED CENTERLINE

[X] "X" DENOTES APPLICABLE DATA
UNLESS OTHERWISE NOTED, DIMENSIONS ARE IN INCHES & TOLERANCES ARE:
.XX ±.06 .XXXX ±.0007
.XXX ±.03

[ ] "X" DENOTES APPLICABLE DATA
LOST WAX CASTING TOL. IS:
0 TO 4" ±.030 , 4.01" TO 7" ±.038"
7.01" TO 10.5" ±.045"
OVER 10.5" ±.052"

THIS DOCUMENT CONTAINS DATA WHICH WHICH IS EITHER PATENTED, PATENT PENDING OR IS THE PROPERTY OF TANDEMLOC, INC. DISCLOSURE, OR COPYING WITHOUT THE WRITTEN AUTHORIZATION OF TANDEMLOC, INC. IS EXPRESSLY PROHIBITED.

APPROVALS	DATE
DRAWN WDD	09-02-98

TANDEMLOC INC.

TITLE
S35000B-1PA
5T WLL LIFT BEAM

SIZE	CAGE CODE	DWG NO.	REV.
D	65059	SS35000B	C

SCALE | CALC.WT | ACT.WT | SHEET 1 OF 1