NOTES:
1. PART NO.: AK20A00-00A-PA
2. WLL: 2.5 TON (5,000 LB.)
3. PROOF TESTED TO 200% (10,000 LB.) AND CERTIFIED
4. STANDARD SPECIFICATION #EAD21000A APPLIES
5. FINISH: SANDBLAST, PRIME AND PAINT SAFETY YELLOW
6. CALCULATED WEIGHT: 520 LB.
7. DESIGNED AND MANUFACTURED TO MEET OR EXCEED ASME B30.20 AND BTH-1, DESIGN CATEGORY B, SERVICE CLASS 0.
8. SPECIALLY DESIGNED FOR 5:1 TO YIELD.

H-FRAME SPREADER (AK20A00-00A-PA)

Cage Code: 65059 | Drawing No: SAK20A00 | Revision: A | Sheet: 1 of 1

UNLESS OTHERWISE SPECIFIED, DIMENSIONS ARE IN INCHES
DO NOT SCALE DRAWING

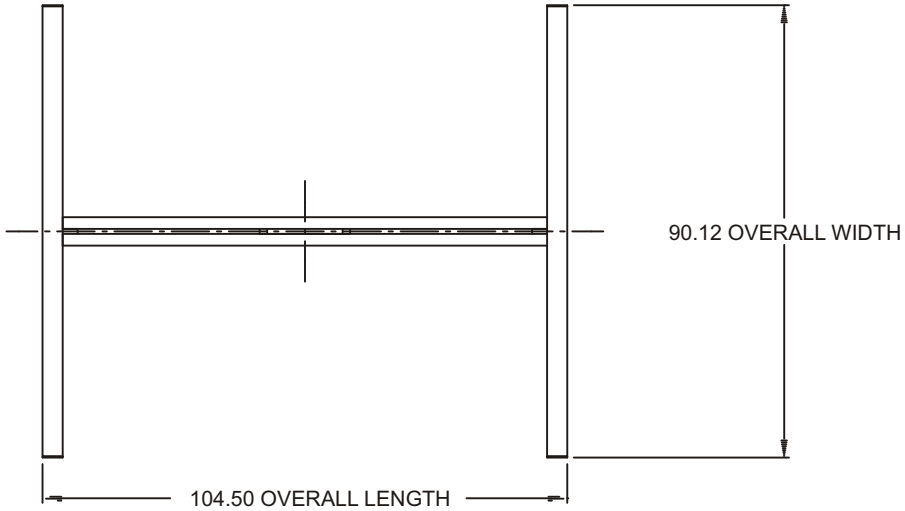

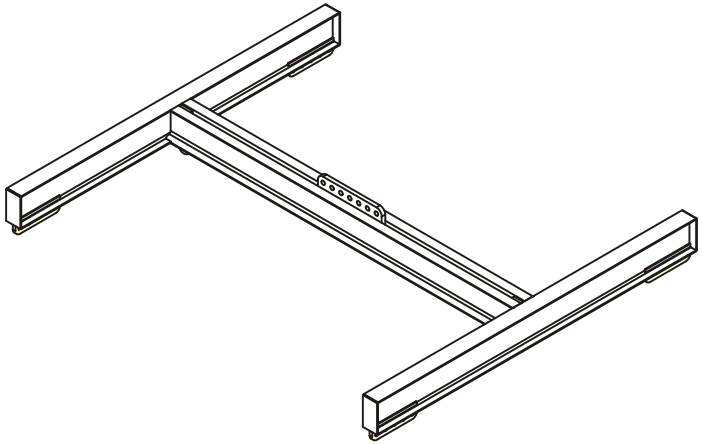

REVISIONS

REV	DESCRIPTION	DATE	APPROVED
A	2-1/2 TON WAS WLL 5,000 LB. ON VINYL LABEL	10/15/09	DAH

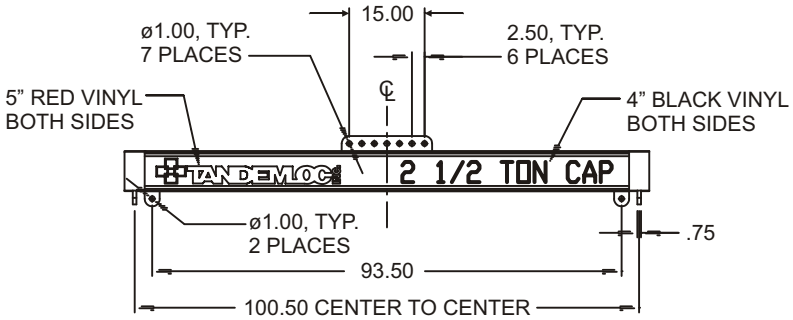

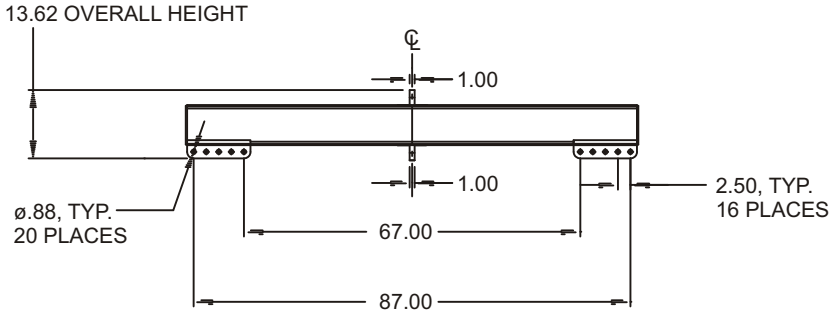

To avoid lifter failure, potential death and property damage, never exceed WLL (Working Load Limit)

This document contains the proprietary information of Tandemloc, Inc. and your access and use shall be, and is at all times, pursuant to and limited by the Tandemloc, Inc. Terms of Use.
You shall not, and shall not encourage, assist, or authorize another party to copy, distribute, publically display, modify, reverse engineer,decompile, or take any other action to reproduce or replicate this document or the information contained herein. © Copyright 2012 by Tandemloc, Inc.

Dimensions are subject to manufacturing tolerance and change.

TANDEMLOC INC

Email: info@tandemloc.com • www.tandemloc.com
824 Highway 101 • Havelock, NC 28532
TEL: 1.800.258.7324 (252.447.7155)
FAX: 1.800.892.3273 (252.447.5502)

Tandemloc designs, manufactures and tests lifting, securing and mobilizing components for all industries. See our website for details and important safety information.

Read all safety labels and instructions prior to use. Product to be used by qualified personnel only.